MINEWSEMI

Millimeter-Wave Radar Development Guidance

MS72SF1

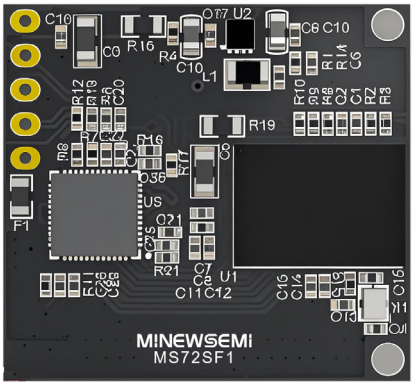

Datasheet

V 1.0.0

Copyright©
Shenzhen Minewsemi Co., Ltd.

Version Note

Version	Details	Contributor(s)	Date	Notes
1.0.0	First edit	Vincle	2025.09.10	

Part Number

Model	Hardware Code
MS72SF11	-

Click the icon to view and download the latest product documents electronically.
https://en.minewsemi.com/file/MS72SF1_Datasheet_C_EN.pdf

1 HARDWARE OVERVIEW

The radar module contains radio frequency components. When the RF transceiver is enabled, the current draw is approximately 530mA, and when it is disabled, the current draw is approximately 80mA. The module's average power consumption is related to the radar detection processing frame period. For a 100ms radar frame period, the average current draw is approximately 110mA. The module's power input requires a high-capacity power supply with an output current of at least 1A.

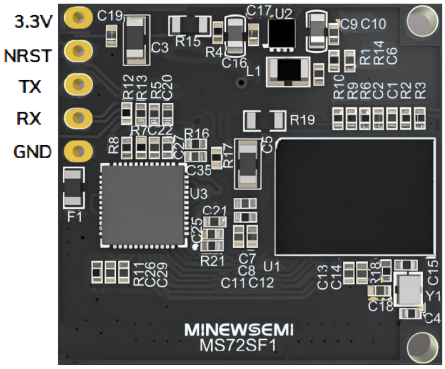

The 3.3V pin is the radar's power supply, and the GND pin is the power ground.
RX and TX are the radar's data transmission interfaces, with RX representing serial receive and TX representing serial transmit.
NRST is the hardware reset pin. A high level enables the device and a low level resets it. It can be left floating normally.

2 GETTING STARTED

Pre-Test Preparation

Step 1 Connect the radar directly to the computer's usb port via a UART to USB device. The wiring is shown in the table below.

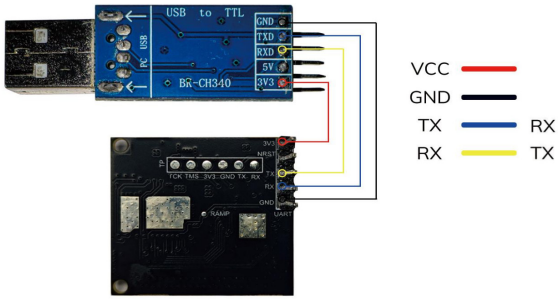

MS72SF1		UART TO USB
3.3V	→	3.3V
GND	→	GND
RX	→	TX
TX	→	RX

Configure the serial communication tool by selecting the corresponding port detected by the computer, and set up the link as follows:
Baud rate: 115200
Data bits: 8 bits
Stop bits: 1 stop bit
Parity: None
CH340 chip driver download: https://www.wch.cn/downloads/CH341SER_EXE.html

 Copyright© Shenzhen Minewsemi Co., Ltd.

Step 2 Open the serial terminal software

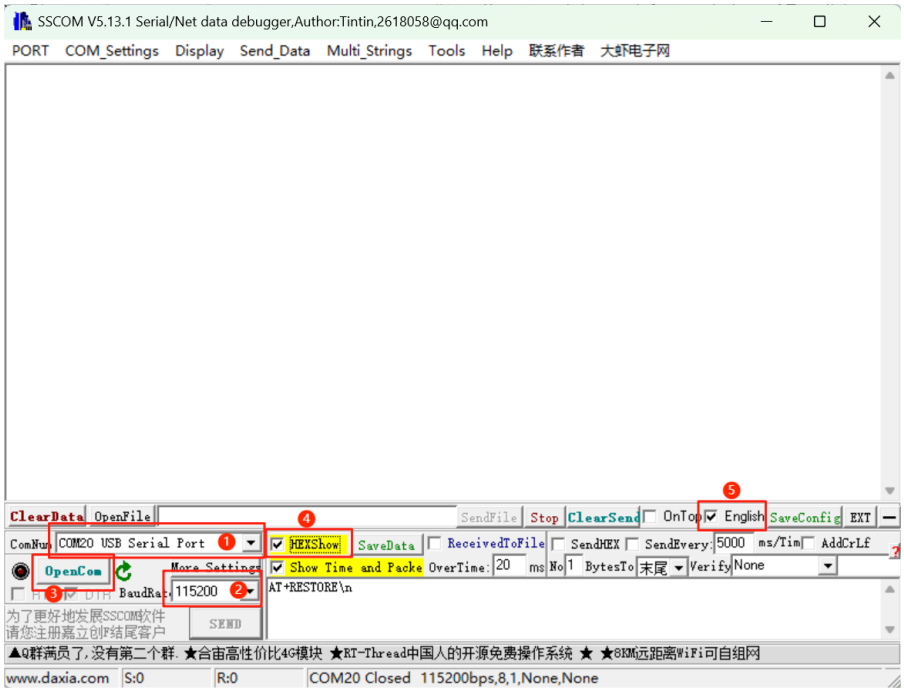

①Select the port number
② Set the baud rate to 115200
③ Click Open Port
④ Select HEX Mode
⑤ Choose the desired language

Step 3 When the module is used in a new environment for the first time, it must first enter learning mode to acquire environmental information.

> ⚠ Note: During the learning process, ensure that there are no people within the radar's detection range. Frequent movement of personnel may cause the learning results to become invalid!

First, send AT+RESTORE\n to restore the module to its default settings, then send AT+STUDY\n.
The information returned is as follows:

55 AA 06 00 B1 B7	Indicates that the detected scene differs from the interference positions stored in flash.
55 AA 06 00 A1 A7	Indicates that the detected scene matches the interference positions stored in flash, and the new positions will be recorded to flash.

Data format:
The first two bytes 55 AA are the header
The third byte indicates the data length
The fourth byte indicates the data type
The fifth byte indicates the data result
The sixth byte is the XOR checksum

 Copyright© Shenzhen Minewsemi Co., Ltd.

Step 4 After powering on, send AT+RESTORE\n to restore the module's configuration, then send AT+STUDY\n to enter learning mode.

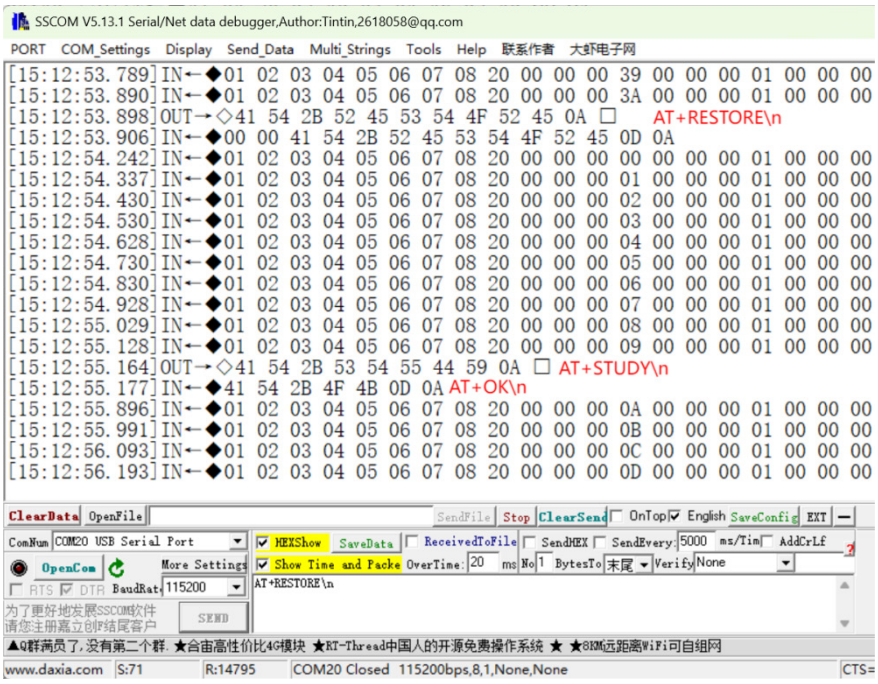

The results will be output approximately 10 seconds after AT+STUDY is sent successfully.

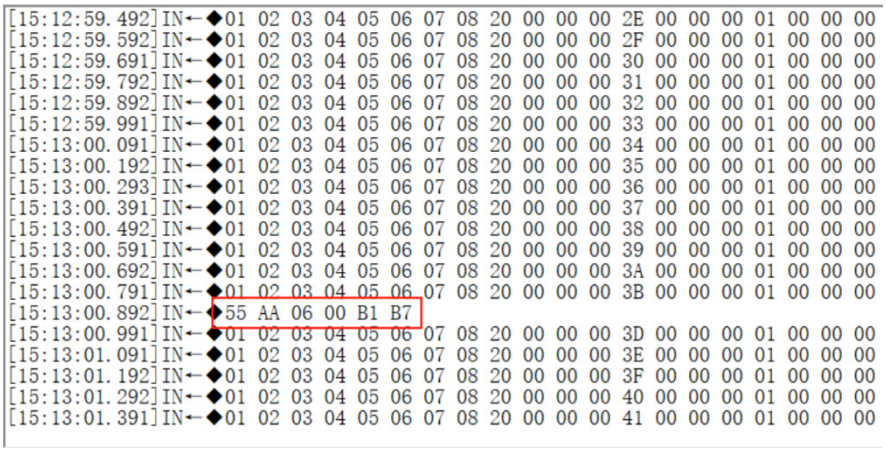

1. When the module outputs 55 AA 06 00 B1 B7, it indicates that the detected scene differs from the interference positions stored in flash. Learning has successfully started. After 10 minutes, AT+RESTORE\n can be sent again to save the data to flash and formally start usage.
2. When the module outputs 55 AA 06 00 A1 A7, it indicates that the detected scene matches the interference positions stored in flash. The new positions have already been recorded to flash, and no further learning is required.

Step 5 After the module outputs 55 AA 06 00 B1 B7, wait for 10 minutes, then resend AT+RESTORE\n to restore the module. At this point, the environmental information has been saved to flash.

 Copyright© Shenzhen Minewsemi Co., Ltd.

3 CONFIGURATION PARAMETERS

AT command

Command	Interpretations
AT+RESTORE\n	Restore Default Settings
AT+STUDY\n	Start STUDY Mode
AT+HEIGHT=270\n	Configure the radar installation height (unit: cm, range: 250–320, default: 270)
AT+HEIGHTD=270\n	Configure the module scanning height (unit: cm, must be less than or equal to the installation height, default: 270)
AT+START\n	Start Data Output
AT+STOP\n	Stop Data Output
AT+RESET\n	Reset
AT+READ\n	Read Firmware Version and Parameters
AT+DEBUG=X\n	Switch Protocol (default: 3) (1 = String Mode, 2 = Test Mode, 3 = Working Mode)
AT+TIME=XX\n	Data Output Interval (unit: ms, range: 100–10000, default: 100)
AT+RANGE=XXX\n	Configure the Radial Distance (unit: cm, range: 100–2000, default: 300)
AT+XNegaD=-XXX\n	Configure the X negative boundary (unit: cm, range: 0–300, default: 300)
AT+XPosiD=XXX\n	Configure the X positive boundary (unit: cm, range: 0–300, default: 300)
AT+YNegaD=-XXX\n	Configure the Y negative boundary (unit: cm, range: 0–300, default: 300)
AT+YPosiD=XXX\n	Configure the Y positive boundary (unit: cm, range: 0–300, default: 300)

Height Configuration

Step 1 After sending AT+RESTORE\n, the module restores its default configuration. Previously learned information has already been saved to flash, and the learned data in flash will not be reset

Default Radial Distance: AT+RANGE=300\n 3.0M

Default Installation Height: AT+HEIGHT=270\n 2.7M

Default Detection Height: AT+HEIGHTD=270\n 2.7M

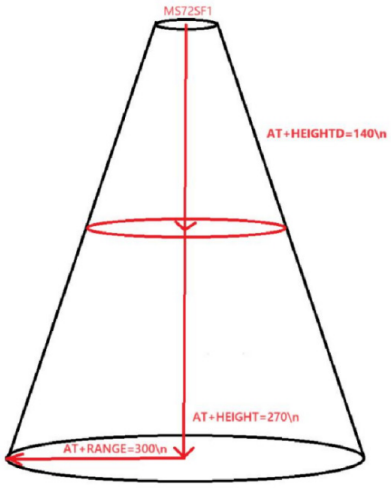

 Copyright© Shenzhen Minewsemi Co., Ltd.

Threshold Setting

Default Threshold Value:

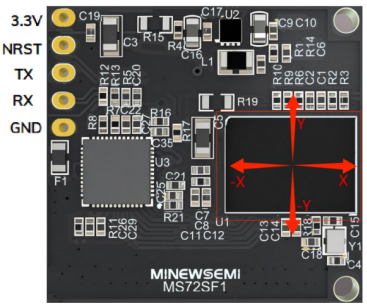

AT+XNegaD=-300\n	Set X-Negative Boundary
AT+XPosiD=300\n	Set X-Positive Boundary
AT+YNegaD=-300\n	Set Y-Negative Boundary
AT+YPosiD=300\n	Set Y-Positive Boundary

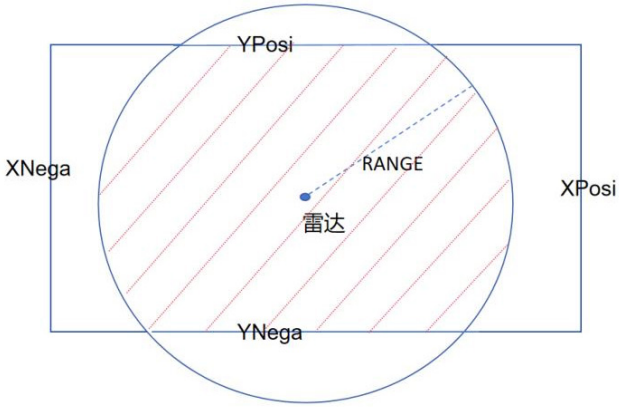

The shaded area indicates the valid region

During normal operation, range parameters should be set according to the actual indoor space. The principle is to avoid scanning large objects such as walls or tables, which may interfere with the module. When configuring via the serial tool, HEX mode can be exited first.

Step 2 Send the range setting commands in sequence and outline the room area.

```
[13:44:58.027]OUT→◇AT+HEIGHT=300   Installation height 3M
□
[13:44:58.084]IN←◆AT+OK=300

[13:45:07.203]OUT→◇AT+HEIGHTD=180   Detection height 1.8M
□
[13:45:07.246]IN←◆AT+OK=180

[13:45:12.035]OUT→◇AT+XPosiD=200   X-axis positive 2M
□
[13:45:12.091]IN←◆AT+OK=200

[13:45:17.765]OUT→◇AT+XNegaD=-200 X-axis negative 2M
□
[13:45:17.816]IN←◆AT+OK=-200

[13:45:24.822]OUT→◇AT+YPosiD=250   Y-axis positive 2M
□
[13:45:24.867]IN←◆AT+OK=250

[13:45:29.992]OUT→◇AT+YNegaD=-250   Y-axis negative 2.5M
□
[13:45:30.049]IN←◆AT+OK=-250

[13:45:44.010]OUT→◇AT+READ
□
[13:45:44.051]IN←◆{
"PeopleCntSoftVerison":"NOP_2.07-20240730-minesemi",
"RangeRes":0.055664,
"VelRes":0.111289,
"TIME":100,
"PROG":2,
"Range":300,
"Sen":4,
"Heart_Time":60,
"Debug":3,
"detectionHeight":180,
"XdetectionN":-200,
"XdetectionP":200,
"YdetectionN":-250,
"YdetectionP":250,
"R":300
}
```

A successful configuration will return AT+OK=XXX, while a failed configuration returns Save Para Fail. In case of failure, the command should be resent.

 Copyright© Shenzhen Minewsemi Co., Ltd.

Step3 After setting the range parameters, the module is ready for use. Launch the graphical PC software https://en.minewsemi.com/file/Radar_DemoCeilMountEN.zip

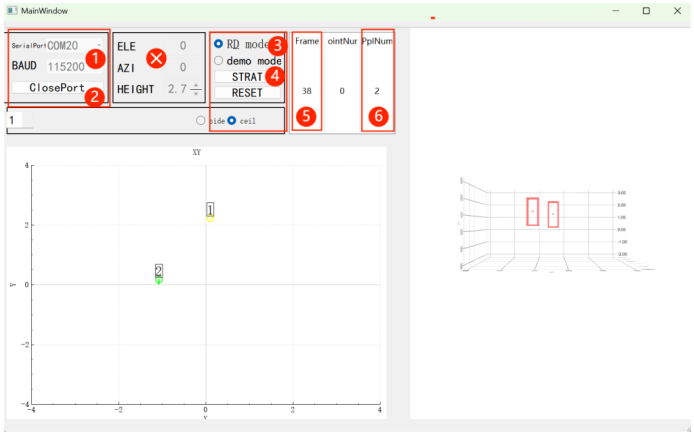

①Select the port number and set the baud rate to 115200
②Open the serial port
③Select Mode
④Click Start
⑤Current Frame Number
⑥Current Number of People
Parameters such as height and elevation angle do not need to be set.

Data Output Protocol Format

Field		Byte Count	Notes
HEAD		8	Frame Header: Fixed as \x01\x02\x03\x04\x05\x06\x07\x08
LENGTH		4	Total Frame Data Length (uint32)
FRAME		4	Frame Number (uint32)
TLVs		4	TLVs = 1, followed by point cloud information (uint32)
POINTLENTH		4	Point Cloud Length: always 0 (uint32)
TLVs		4	TLVs = 2, followed by people information (uint32)
TRACKLENTH		4	People Information Length (uint32) (Number of people = TRACKLENGTH / 32)
Personnel 1	Q	4	Reserved Field (uint32)
	ID	4	Person ID (uint32)
	X	4	Person's X/Y/Z coordinates and velocity (float). Coordinates in meters (m), velocity in m/s, precise to two decimal places. Unpack as little-endian single-precision floats per IEEE 754 standard. https://www.binaryconvert.com/convert_float.html https://www.cnblogs.com/guanshan/articles/guan022.html
	Y	4	
	Z	4	
	Vx	4	
	Vy	4	
	Vz	4	
.....			
Personnel n	Q	4	Reserved Field (uint32)
	ID	4	Person ID (uint32)
	X	4	Person's X/Y/Z coordinates and velocity (float). Coordinates in meters (m), velocity in m/s, precise to two decimal places. Unpack as little-endian single-precision floats per IEEE 754 standard. https://www.binaryconvert.com/convert_float.html https://www.cnblogs.com/guanshan/articles/guan022.html
	Y	4	
	Z	4	
	Vx	4	
	Vy	4	
	Vz	4	

 Copyright© Shenzhen Minewsemi Co., Ltd.

Example

01 02 03 04 05 06 07 08 A0 00 00 00 CD 01 00 00 01 00 00 00 00 00 00 00 02 00 00 00 80 00 00 00 00 00 00 00 00 00 00 00 BE 36 D8 BE CD B6 DC 3E 26 C0 87 3F 00 00 00 00 00 00 00 00 00 00 00 00 00 00 00 00 01 00 00 00 C6 36 2E BF D3 BF F2 BF B6 75 9F 3F 00 00 00 00 00 00 00 00 00 00 00 00 00 00 00 00 02 00 00 00 F4 D1 12 3E E1 E9 99 3F 3F 33 8E 3F 00 00 00 00 00 00 00 00 00 00 00 00 00 00 00 00 03 00 00 00 8E F1 38 BB FB B9 52 BF EE BE 02 40 00 00 00 00 00 00 00 00 00 00 00 00

01 02 03 04 05 06 07 08: Frame header
A0 00 00 00: total length of the frame is 160 bytes
CD 01 00 00: current frame count is 525 frames
01 00 00 00: TLV=1
00 00 00 00: constant 0
02 00 00 00: TLV=2
80 00 00 00: length of personnel data 128, i.e. number of personnel = 128/32 = 4 person
00 00 00 00: Reserved
00 00 00 00: Personnel 0
BE 36 D8 BE CD B6 DC 3E 26 C0 87 3F: The XYZ coordinates of Person 0 are -1.79, -3.83, and 1.34 respectively
00 00 00 00 00 00 00 00 00 00 00 00: XYZ speeds of 0, 0, 0 for person 0
00 00 00 00: Reserved
01 00 00 00: Personnel 1
C6 36 2E BF D3 BF F2 BF B6 75 9F 3F:The XYZ coordinates of Person 1
00 00 00 00 00 00 00 00 00 00 00 00:XYZ speeds of person 1

Firmware Update

Step 1 Connect the radar directly to the computer's USB port via a UART-to-USB adapter. The wiring is shown in the table below.

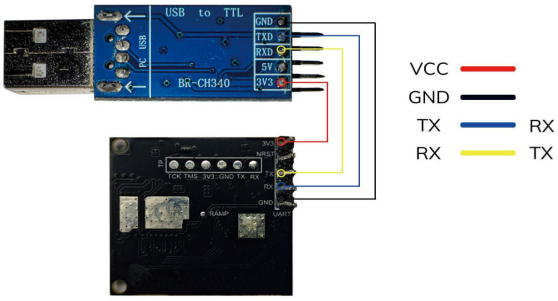

MS72SF1		UART TO USB
3.3V	→	3.3V
GND	→	GND
RX	→	TX
TX	→	RX

 Copyright© Shenzhen Minewsemi Co., Ltd.

Configure the serial communication tool by selecting the corresponding port detected by the computer, and set up the link as follows:
Baud rate: 115200
Data bits: 8
Stop bits: 1
Parity: None

Step 2 Open https://en.minewsemi.com/file/Serial_port_upgrade_tool.zip

①Search for Serial Ports
②Select Port
③Set the baud rate to 115200
④Open the por
⑤Select the firmware to be flashed
⑥Start Upgrade

Wait for the progress bar to complete. Once finished, the firmware update is complete. Successful flashing is shown as follows.

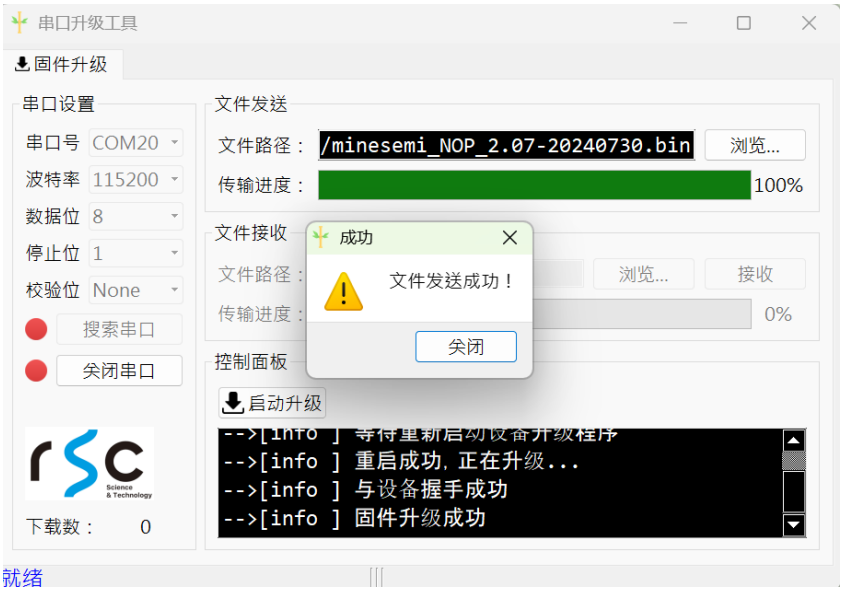

 Copyright© Shenzhen Minewsemi Co., Ltd.

4 TROUBLE SHOOTING

FAQ 1: After powering on, the module remains on this screen, and no commands have any effect.

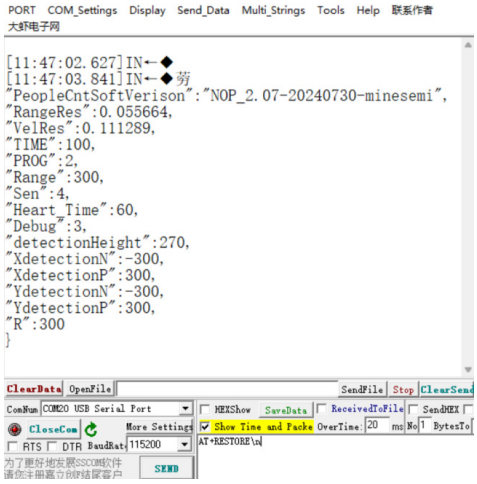

A: Insufficient supply current. It is recommended to use a 3.3V power source with a rated current of 1000mA.

FAQ 2: In a “people present” environment, the radar may occasionally fail to detect a person, or in a “no people” environment, it may falsely report a person. What could be the possible causes?

A:

Phenomenon 1: The radar scans a large area, detecting reflections from walls, doorways, or movement on the other side of wooden partition walls.

Adjustment: First complete the learning mode, then set the range according to the scene.

Phenomenon 2: The radar is positioned directly above running air conditioners or fans.

Adjustment: Reposition the radar so it does not face air conditioners or fans directly.

Phenomenon 3: Objects sway due to airflow from air conditioners.

Adjustment: Cotton or non-metallic items will not cause false detections. Metallic objects should be secured.

Phenomenon 4: The radar is not secured, and vibrations cause false detections.

Adjustment: Ensure the radar mount is stable and avoid any shaking or vibrations.

Phenomenon 5: Occasional movement of pets, birds, or other small moving objects.

Adjustment: The radar is highly sensitive to micro-movements, so this type of interference cannot be eliminated.

Phenomenon 6: Power interference occasionally causes false detections.

Adjustment: Ensure a stable power supply and minimize voltage ripple.

FAQ 3: Why does the module require learning and calibration?

A: Study stores data of the new environment into flash memory as a reference baseline for operation, helping the module better determine the validity of detected targets. Calibration only needs to be performed during the first use; as long as the position remains unchanged, recalibration is not required. Data after calibration will not be erased by the AT+RESTORE\n command.

FAQ 4: In a data frame, what do TLV, Q, and V represent?

TLV serves as a separator between different types of data. 01 00 00 00 is followed by point cloud data, while 02 00 00 00 is followed by people count data.

Q is a reserved bit (Reserved Bits, abbreviated as RSV) and is always 0.

V represents velocity.

 Copyright© Shenzhen Minewsemi Co., Ltd.

5 STORAGE CONDITIONS

- **Please use this product within 6 months after signing the receipt.**
  - This product should be stored without opening the package at an ambient temperature of 5~35°C and a humidity of 20~70%RH.
  - This product should be left for more than 6 months after receipt and should be confirmed before use.
  - The product must be stored in a non-corrosive gas (Cl2, NH3, SO2, NOx, etc.).
  - To avoid damaging the packaging material, do not apply any excessive mechanical shocks, including but not limited to sharp objects adhering to the packaging material and product dropping.

- **This product is suitable for MSL2 (based on JEDEC standard J-STD-020).**
  - After opening the package, the product must be stored at ≤30°C/<60%RH. It is recommended to use the product within 3-6 months after opening the package.
  - When the color of the indicator in the package changes, the product should be baked before welding.

- **Baking is not required for one year if exposure is limited to <30°C and 60%RH. Refer to MSL2 for exposure criteria for moisture sensitivity level. If exposed to (≥168h@85°C/60%RH) conditions or stored for more than one year, recommended baking conditions.**

  1. 120 +5/-5°C, 8 hours, 1 time

  Products must be baked individually on heat-resistant trays because the materials (base tape, reel tape, and cover tape) are not heat-resistant, and the packaging material may be deformed at temperatures of 120℃;

  2、90℃ +8/-0℃，24hours，1times

  The base tape can be baked together with the product at this temperature. Please pay attention to the uniformity of heat.

6 HANDLING CONDITIONS

- Be careful in handling or transporting products because excessive stress or mechanical shock may break products.
- Handle with care if products may have cracks or damages on their terminals. If there is any such damage, the characteristics of products may change. Do not touch products with bare hands that may result in poor solder ability and destroy by static electrical charge.

7 QUALITY

Cognizant of our commitment to quality, we operate our own factory equipped with state-of-the-art production facilities and a meticulous quality management system. We hold certifications for ISO9001, ISO14001, ISO27001, OHSA18001, BSCI.

Every product undergoes stringent testing, including transmit power, sensitivity, power consumption, stability, and aging tests. Our fully automated module production line is now in full operation, boasting a production capacity in the millions, capable of meeting high-volume production demands.

 Copyright© Shenzhen Minewsemi Co., Ltd.

8 COPYRIGHT STATEMENT

This manual and all the contents contained in it are owned by Shenzhen Minewsemi Co., Ltd. and are protected by Chinese laws and applicable international conventions related to copyright laws.

The certified trademarks included in this product and related documents have been licensed for use by MinewSemi. This includes but is not limited to certifications such as BQB, RoHS, REACH, CE, FCC, BQB, IC, SRRC, TELEC, WPC, RCM, WEEE, etc. The respective textual trademarks and logos belong to their respective owners. For example, the Bluetooth® textual trademark and logo are owned by Bluetooth SIG, Inc. Other trademarks and trade names are those of their respective owners. Due to the small size of the module product, the "®" symbol is omitted from the Bluetooth Primary Trademarks information in compliance with regulations.

The company has the right to change the content of this manual according to the technological development, and the revised version will not be notified otherwise. Without the written permission and authorization of the company, any individual, company, or organization shall not modify the contents of this manual or use part or all of the contents of this manual in other ways. Violators will be held accountable in accordance with the law.

9 RELATED DOCUMENTS

- MinewSemi_Product_Naming_Reference_Manual_V1.0
  https://en.minewsemi.com/file/MinewSemi_Product_Naming_Reference_Manual_EN.pdf
- MinewSemi_Connectivity_Module_Catalogue_V2.0
  https://en.minewsemi.com/file/MinewSemi_Connectivity_Module_Catalogue_EN.pdf

For product change notifications and regular updates of Minewsemi documentation, please register on our website: **www.minewsemi.com**

MINEWSEMI

SHENZHEN MINEWSEMI CO., LTD.

0086-755-2801 0353
https://minewsemi.com
minewsemi@minew.com
https://store.minewsemi.com
No.8, Qinglong Road, Longhua District, Shenzhen, China